DRG No. D6425246

BRUSH TRANSFORMERS
HAWKER SIDDELEY

BRUSH TRANSFORMERS
LIMITED
Loughborough
England

TRANSFORMER TO B.S. 171 - 1978

kVA		2000	TYPE OF COOLING		ONAN
RATED VOLTS (NO LOAD)	H.V.	4160	RATED FREQUENCY	Hz	60
	L.V.	455	YEAR OF MANUFACTURE		1993
RATED CURRENT (AMPERES)	H.V.	277.5	CONNECTION SYMBOL		Dyn 5
	L.V.	2537	UNTANKING MASS	kg	2260
PHASES		3	TOTAL MASS	kg	4620
OWNERS No.			OIL	LITRES	944
INSULATION LEVEL	H.V.	60 kVp	MASS OF OIL	kg	808
	L.V.	3 kV	DIAGRAM DRAWING No.		D6425246
INSULATION LIQUID RISE		60 °C	MAKERS SERIAL No.		74688/
WINDING RESISTANCE RISE		65 °C	TRANSPORTATION MASS	kg	4620

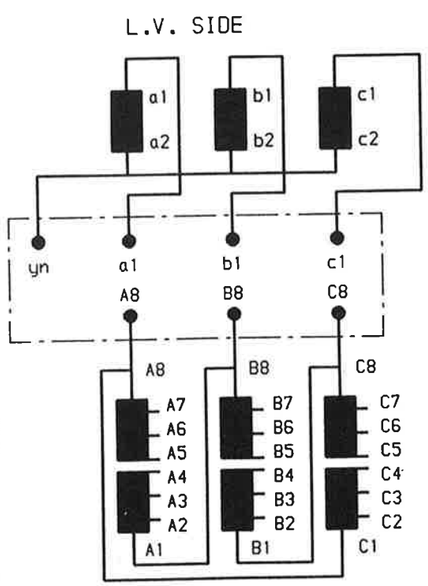

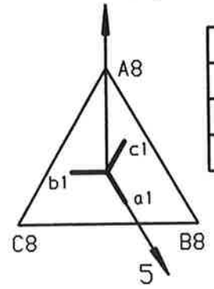

IMPEDANCE VOLTS	
---- V	---- %
4160 V	%
---- V	---- %

HV VOLTS	H.V.SWITCH POS'N	CONN'S	HV AMPS
4368	1	5 - 4	264.4
4264	2	4 - 6	270.8
4160	3	6 - 3	277.5
4056	4	3 - 7	284.7
3952	5	7 - 2	292.2

ALL FULL POWER TAPPINGS

MATERIAL:-0.8 THK STAINLESS STEEL
ALL MARKINGS SUNK BLACK
ON A MATT SURFACE
PLATE SIZE 220x154
WITH FOUR HOLES Ø5.5
AT 142x190 CTRS

BRUSH TRANSFORMERS HAWKER SIDDELEY

AS BUILT

11	
10	
03	12
02	08
01	
00	

This drawing is confidential and the copyright of
BRUSH TRANSFORMERS LIMITED
PO Box 20, Loughborough, Leics.
LE11 1HN England
Tel: Loughborough (0509) 611411
Telex:341094 BTL G
Cables: Brushtran Lobro Telex
TeleFax (0509) 610550

DIMENSIONS IN MM UNLESS OTHERWISE STATED
MANUFACTURING TOLERANCES TO BSD 942.
WELDING TO PS 3001 AND TWD MANUAL
SURFACE TEXTURE TO BSD 986.

FIRST ANGLE PROJECTION

APPROVED Kim O'Lynn

DRAWN BY R.HORNE

DATE 11/3/93

DIAGRAM PLATE

A3 297 x 420

DRG No. D6425246

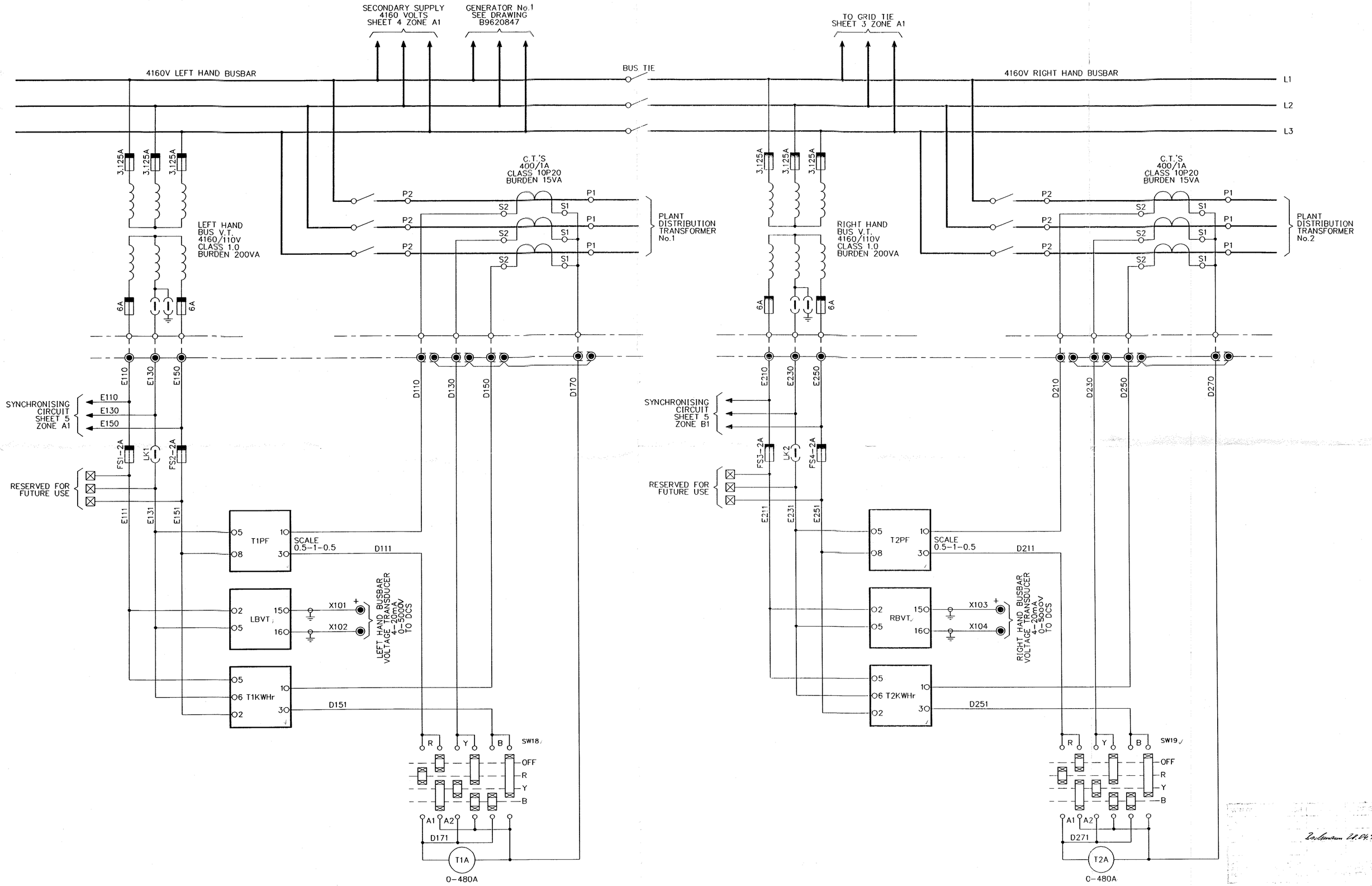

ISS.	DR'N	ZONE	ISS.	DR'N	ZONE	ISS.	DR'N	ZONE	ISS.	DR'N	ZONE	ISS.	DR'N	ZONE	CIRC.L	This drawing is confidential and the copyright of BRUSH ELECTRICAL MACHINES LIMITED © 1993 LOUGHBOROUGH, ENGLAND. It must not be copied or parted to a third party without written consent.	HAWKER SIDDELEY BRUSH BRUSH ELECTRICAL MACHINES	1st.CONTRACT No.	DRG.REF.	CAD.REF.	DR'N	DPL	DEPT	PROJECTS
	CH'D	CARN		CH'D	CARN		CH'D	CARN		CH'D	CARN		CH'D	CARN	+ PRINTS TO			09/65002		2085002A	CH'D	JAB	SCALE	NTS
	APP	DATE		APP	DATE		APP	DATE		APP	DATE		APP	DATE	PROJ C&I DES			CIRCUIT DIAGRAM OF			APP		DATE	24.3.93
ISS.	DR'N	ZONE	ISS.	DR'N	ZONE	ISS.	DR'N	ZONE	B	DR'N	ZONE	ISS.	DR'N	ZONE	PROJ. DES.			MIMIC PANEL			B 9620850		ISSUE	A
	CH'D	CARN		CH'D	CARN		CH'D	CARN		CH'D	CARN		CH'D	CARN							SHEET 2 OF 7			
	APP	DATE		APP	DATE		APP	DATE		APP	DATE		APP	DATE										

REF	DESCRIPTION	SHEET
RELAYS		
AS1-2	AUTO SYNCHRONISING RELAY	6
BTB1-2	BUS-TIE BREAKER SLAVE	6
BTS1-4	BUS-TIE SYNCHRONISING RELAY	6
FAST	FAIL TO AUTO SYNCHRONISE RELAY	6
G1B1-2	GENERATOR No.1 BREAKER SLAVE	6
G1N	GENERATOR No.1 NEUTRAL BREAKER SLAVE	6
G1S1-7	GENERATOR No.1 SYNCHRONISING	6
G2B1	GENERATOR No.2 BREAKER SLAVE	6
GTS1-4	GRID-TIE SYNCHRONISING	6
G2S1-7	GENERATOR No.2 SYNCHRONISING	6
GTB1-2	GRID-TIE BREAKER SLAVE	6
MS1-2	MANUAL SYNCHRONISING	6
SSB1	SECONDARY SUPPLY BREAKER SLAVE	6
GPFC	GRID-TIE POWER FACTOR CONTROL	6
AC RELAYS		
G1VR	GENERATOR No.1 VOLTAGE RISE RELAY	5
G2VR	GENERATOR No.2 VOLTAGE RISE RELAY	5
LDB1	LEFT HAND DEAD BUS RELAY	5
LDB2	LEFT HAND DEAD BUS RELAY	5
RDB1	RIGHT HAND DEAD BUS RELAY	5
RDB2	RIGHT HAND DEAD BUS RELAY	5
SWITCHES & PUSHBUTTONS		
SW1	PLANT TRANSFORMER No.1 BREAKER SWITCH TRIP/N/CLOSE	7
SW2	GEN No.1 BREAKER SWITCH TRIP/N/CLOSE	7
SW3	SECONDARY SUPPLY BREAKER SWITCH TRIP/N/CLOSE	7
SW4	BUS-TIE BREAKER SWITCH TRIP/N/CLOSE	7
SW5	GRID-TIE BREAKER SWITCH TRIP/N/CLOSE	7
SW6	PLANT TRANSFORMER No.2 BREAKER SWITCH TRIP/N/CLOSE	7
SW7	GEN No.1 SYNCH SELECTOR SWITCH OFF/ON	6,7
SW8	BUS-TIE SYNCH SELECTOR SWITCH OFF/MANUAL	6,7
SW9	GRID-TIE SYNCH SELECTOR SWITCH OFF/MANUAL	6,7
SW10	SYNCHRONISING VOLTMETER SELECTOR SWITCH OFF/R/Y/B	5
SW11	DEAD BUS OVERRIDE OFF/ON	7
SW12	SYNCH SWITCH MANUAL/OFF/AUTO	6
SW13	SECONDARY SUPPLY VOLTMETER PHASE SELECTOR OFF/R/Y/B	4
SW14	GRID-TIE VOLTMETER PHASE SELECTOR OFF/R/Y/B	3
SW15	SECONDARY SUPPLY AMMETER PHASE SELECTOR OFF/R/Y/B	4
SW16	GRID-TIE AMMETER PHASE SELECTOR OFF/R/Y/B	3
SW17	GEN No.2 SYNCH SELECTOR SWITCH OFF/ON (FUTURE)	6,7
SW18	PLANT TRANSFORMER No.1 AMMETER PHASE SELECTOR OFF/R/Y/B	2
SW19	PLANT TRANSFORMER No.2 AMMETER PHASE SELECTOR OFF/R/Y/B	2
SW20	HEATER SWITCH OFF/ON	4
SW21	GEN No.2 BREAKER SWITCH TRIP/N/CLOSE (FUTURE)	7
PB1	LAMP TEST PUSHBUTTON	6
TRANSDUCERS		
GTVT	GRID-TIE VOLTAGE TRANSDUCER	3
GTWT	GRID-TIE POWER TRANSDUCER	3
LBVT	LEFT HAND BUSBAR VOLTAGE TRANSDUCER	2
RBVT	RIGHT HAND BUSBAR VOLTAGE TRANSDUCER	2
SSVT	SECONDARY SUPPLY VOLTAGE TRANSDUCER	4

REF	DESCRIPTION	SHEET
METERS		
DF	DUAL FREQUENCY METER	5
DV	DUAL VOLTMETER	5
EXP	EXPORT KWHr & KVARHr METER (MAXIMIUM DEMAND UNIT)	3
GTA	GRID-TIE AMMETER	3
G1KWHr	GENERATOR No.1 KWHr METER	7
G1KVARHr	GENERATOR No.2 KVARHr METER	7
GTPF	GRID-TIE POWER FACTOR METER	3
GTV	GRID-TIE VOLTMETER	3
GTW	GRID-TIE IMPORT/EXPORT WATTMETER	3
IMP	IMPORT KWHr & KVARHr METER (MAXIMIUM DEMAND UNIT)	3
S	SYNCHROSCOPE	5
SSA	SECONDARY SUPPLY AMMETER	4
SSPF	SECONDARY SUPPLY POWER FACTOR INDICATOR	4
SSV	SECONDARY SUPPLY VOLTMETER	4
SSW	SECONDARY SUPPLY WATTMETER	4
T1KWHr	PLANT TRANSFORMER No.1 KW HOUR METER	2
T2KWHr	PLANT TRANSFORMER No.2 KW HOUR METER	2
T1A	PLANT TRANSFORMER No.1 AMMETER	2
T2A	PLANT TRANSFORMER No.2 AMMETER	2
T1PF	PLANT TRANSFORMER No.1 POWER FACTOR INDICATOR	2
T2PF	PLANT TRANSFORMER No.2 POWER FACTOR INDICATOR	2

REF	DESCRIPTION	TYPE	RATING	SHEET
FS1	L.H. BUSBAR	2F21	2 AMP	2
LK1	INSTRUMENTATION			2
FS2		2F21	2 AMP	2
FS3	R.H. BUSBAR	2F21	2 AMP	2
LK2	INSTRUMENTATION			2
FS4		2F21	2 AMP	2
FS5	GRID-TIE	2F21	2 AMP	3
LK3	INSTRUMENTATION			3
FS6		2F21	2 AMP	3
FS7	SECONDARY SUPPLY	2F21	2 AMP	4
LK4	INSTRUMENTATION			4
FS8		2F21	2 AMP	4
FS9	110V AC SUPPLY	16F21	16 AMP	4
LK5				4
FS10	ANTICONDENSATION HEATERS	4F21	4 AMP	4
LK6				4
FS11	INTERNAL LIGHTS	2F21	2 AMP	4
LK7				4
FS12	L.H. BUS V.T. SYNCHRONISING	2F21	2 AMP	5
LK8	CIRCUITS			5
FS13		2F21	2 AMP	5
FS14	GENERATOR No.1 V.T.	2F21	2 AMP	5
LK9	SYNCHRONISING CIRCUITS			5
FS15		2F21	2 AMP	5
FS16	R.H. BUS V.T. SYNCHRONISING	2F21	2 AMP	5
LK10	CIRCUITS			5
FS17		2F21	2 AMP	5
FS18	GRID V.T. SYNCHRONISING	2F21	2 AMP	5
LK11	CIRCUITS			5
FS19		2F21	2 AMP	5
FS20	GENERATOR No.2 V.T.	2F21	2 AMP	5
LK12	SYNCHRONISING CIRCUITS			5
FS21		2F21	2 AMP	5
FS22	GENERATOR No.2	2F21	2 AMP	5
LK13	INSTRUMENTATION			5
FS23		2F21	2 AMP	5
~~FS24~~	~~48V DC CONTROL CIRCUITS~~	~~2F21~~	~~2 AMP~~	~~5~~
FS25		2F21	2 AMP	5
FS26	48V INDICATION LAMPS	4F21	4 AMP	5
FS27		4F21	4 AMP	5

REF	DESCRIPTION	SHEET
MISCELLANEOUS		
AC	AUXILIARY CONTROLLER	3
D1-20	DIODES	6
DS1-2	DOOR MICROSWITCH	4
HTR1-3	ANTI-CONDENSATION HEATERS	4
ICT2	ITERPOSING CURRENT TRANSFORMER	3
MPFSP	MOTOTRISED POWER FACTOR SETTING POT.	3
LP1-20	MIMIC INDICATION LAMPS	6
IL1-2	INTERNAL LIGHTS	4
LPHTR	HEATER LIGHT	4
LPS1-2	SYNCHRONISING LAMPS	5
MAS100	AUTO SYNCHRONISER	5/7
MCS100	CHECK SYNCHRONISER	5/6/7
RV1-2	POTENTIOMETERS	3

NOTES:-

1. ASSOCIATED DRAWINGS:
   GENERAL ARRANGEMENT B9620849
   TERMINAL ARRANGEMENT B9620851
   GENERATOR No.1 CONTROL PANEL
   GENERAL ARRANGEMENT B9620486
   CIRCUIT DIAGRAM B9620487
   TERMINAL ARRANGEMENT B9620488

2. WIRING: WIRING TO CIRCUITS RATED OVER 6AMPS AND WIRING TO C.T.'S IS 2.5mm² (50/0.25) BLACK PVC INSULATED.ie H1,H2,H3,H4 & ALL WIRES PREFIXED D EARTH WIRES ARE 2.5mm² (50/0.25) GREEN/YELLOW PVC INSULATED. ALL OTHER WIRING 1.5mm² (30/0.25) BLACK PVC INSULATED. ALL WIRING IS 600/1000V GRADE TO BS62.31 TYPE BK. (SHOPS TO REFER TO WIRING NOTES DRG E9620965)

3. CABLE DUCTING TO BE OPEN SLOT, RIGID, GREY, SELF EXTINGUISHING PVC.

4. TERMINAL DESIGNATIONS:
   - OUTGOING TERMINALS
   - INTERCONNECTION TERMINALS BETWEEN GCP1 AND MIMIC
   - INTERCONNECTION TERMINALS BETWEEN GCP2 AND MIMIC

5. FUSES AND LINK HOLDERS TO BE LEFT EMPTY READY FOR GENERATOR No.2 (FUTURE)

6. ITEMS MARKED THUS ✳ ARE NOT OF BRUSH ELECTRICAL MACHINES LTD. SUPPLY.

7. CUSTOMER WIRING SHOWN DASHED.

RECORD DRAWINGS AS COMMISSIONED

CUSTOMER:- VON ROLL
FOR:- TYNES BAY, BERMUDA.
I.C.D. CONTRACT No.:- 09/65002/JAB/APH
PROJECTS CONTRACT No.:- 01/25005

ISS	DR'N	ZONE	ISS	DR'N	ZONE	ISS	DR'N	ZONE	ISS	DR'N	ZONE
	CH'D	CARN		CH'D	CARN		CH'D	CARN		CH'D	CARN
	APP	DATE		APP	DATE		APP	DATE		APP	DATE
	DR'N	ZONE		DR'N	ZONE	D	DR'N DPL	ZONE			
	CH'D	CARN		CH'D	CARN		CH'D JAB	CARN			

SEE OTHER SHEETS

ISS		DR'N	FRC	ZONE	
C	BTB2,GTB2 RELAYS ADDED	CH'D	JAB	CARN	
		APP	BLG	DATE	16/6/94
B	SW21 – FUTURE GEN 2 BREAKER SWITCH ADDED. TRANSFORMER No.1&2 NOW	DR'N	GM	ZONE	
		CH'D	JAB	CARN	09789

CIRC. L
+ PRINTS TO
PROJ. C&I DES
PROJ. DES.

This drawing is confidential and the copyright of BRUSH ELECTRICAL MACHINES LIMITED © 1993 LOUGHBOROUGH, ENGLAND. It must not be copied or passed to a third party

HAWKER SIDDELEY
BRUSH ELECTRICAL MACHINES

1st.CONTRACT No.	DRG.REF.	CAD.REF.	DR'N	DPL	DEPT	PROJECTS
09/65002		2085001D	CH'D	JAB	SCALE	NTS
			APP	BLG	DATE	24/3/93

CIRCUIT DIAGRAM OF MIMIC PANEL

B 9620850 ISSUE D

B9620850 | ISSUE D | FIRST ANGLE PROJECTION
SHEET 2 OF 7

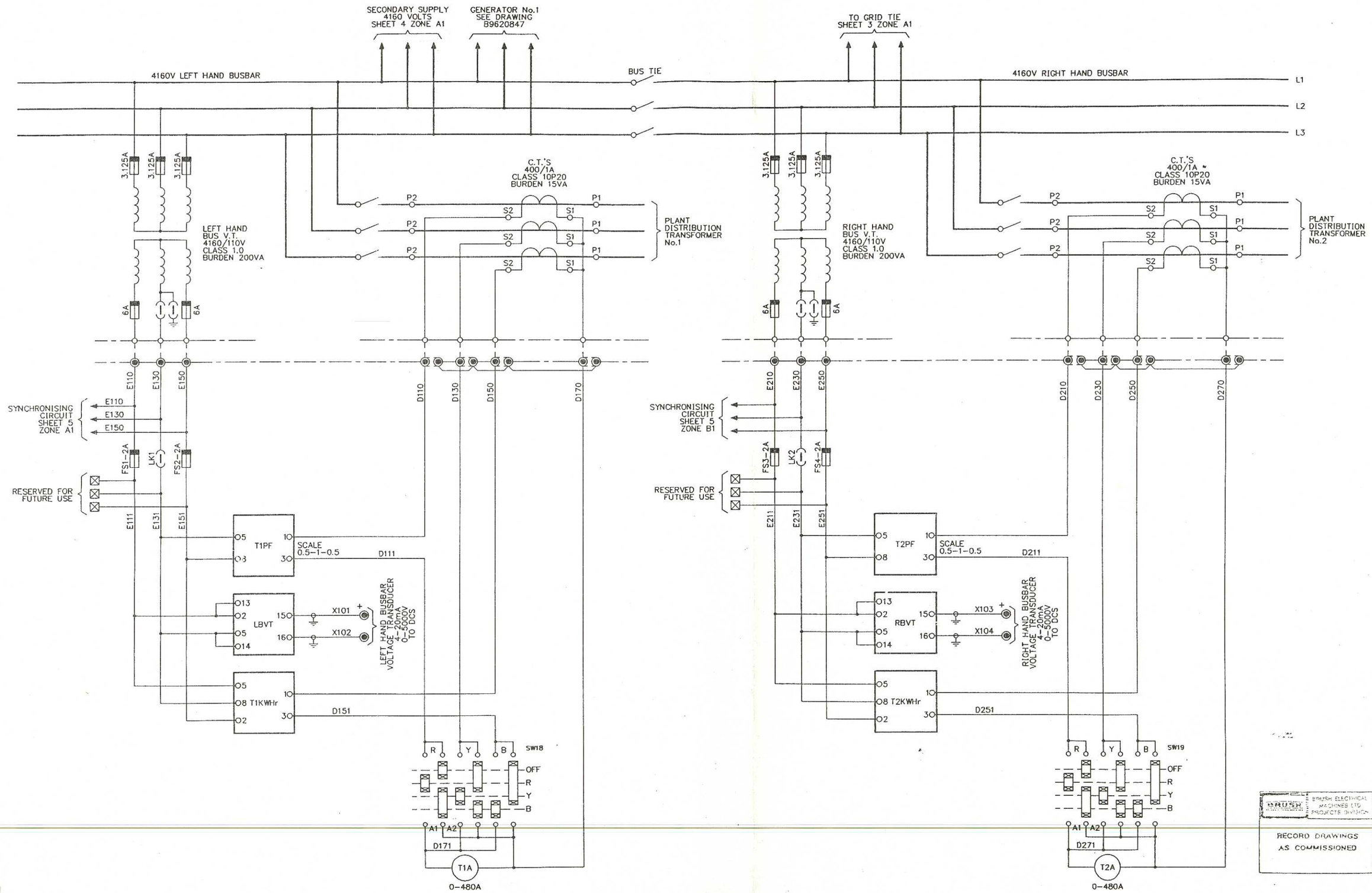

RECORD DRAWINGS AS COMMISSIONED

BRUSH ELECTRICAL MACHINES LTD PROJECTS DIVISION

ISS		DR'N	ZONE			DR'N	ZONE			DR'N	ZONE		C	LBVT,RBVT TERMLS 13,14 ADDED.	DR'N	FRC	ZONE		CIRC. L				1st.CONTRACT No.	DRG.REF.	CAD.REF.	DR'N	DPL	DEPT	PROJECTS
		CH'D	CARN			CH'D	CARN			CH'D	CARN				CH'D	JAB	CARN		+ PRINTS TO				09/65002		2085002D	CH'D	JAB	SCALE	NTS
		APP	DATE	ISS		APP	DATE	ISS		APP	DATE	ISS			APP	BLG	DATE	16/6/94	PROJ C&I DES							APP	BLG	DATE	24/3/93
ISS		DR'N	ZONE			DR'N	ZONE		D	SEE OTHER SHEETS	DR'N	DPL	ZONE	B	TERMINAL No.8 ON T1KWHr & T2KWHr WAS MARKED AS TERMINAL No.6.	DR'N	GM	ZONE	PROJ. DES.				CIRCUIT DIAGRAM OF MIMIC PANEL			B 9620850		ISSUE	D
		CH'D	CARN			CH'D	CARN				CH'D	JAB	CARN			CH'D	JAB	CARN	09789										
		APP	DATE	ISS		APP	DATE	ISS			APP	B.C.	DATE 19/9/94	ISS		APP	BLG	DATE	17.5.93							SHEET 2 OF 7			

This drawing is confidential and the copyright of BRUSH ELECTRICAL MACHINES LIMITED © 1993 LOUGHBOROUGH, ENGLAND. It must not be copied or passed to a third party without written consent.

BRUSH BRUSH ELECTRICAL MACHINES

B9620850 | ISSUE D | FIRST ANGLE PROJECTION
SHEET 3 OF 7

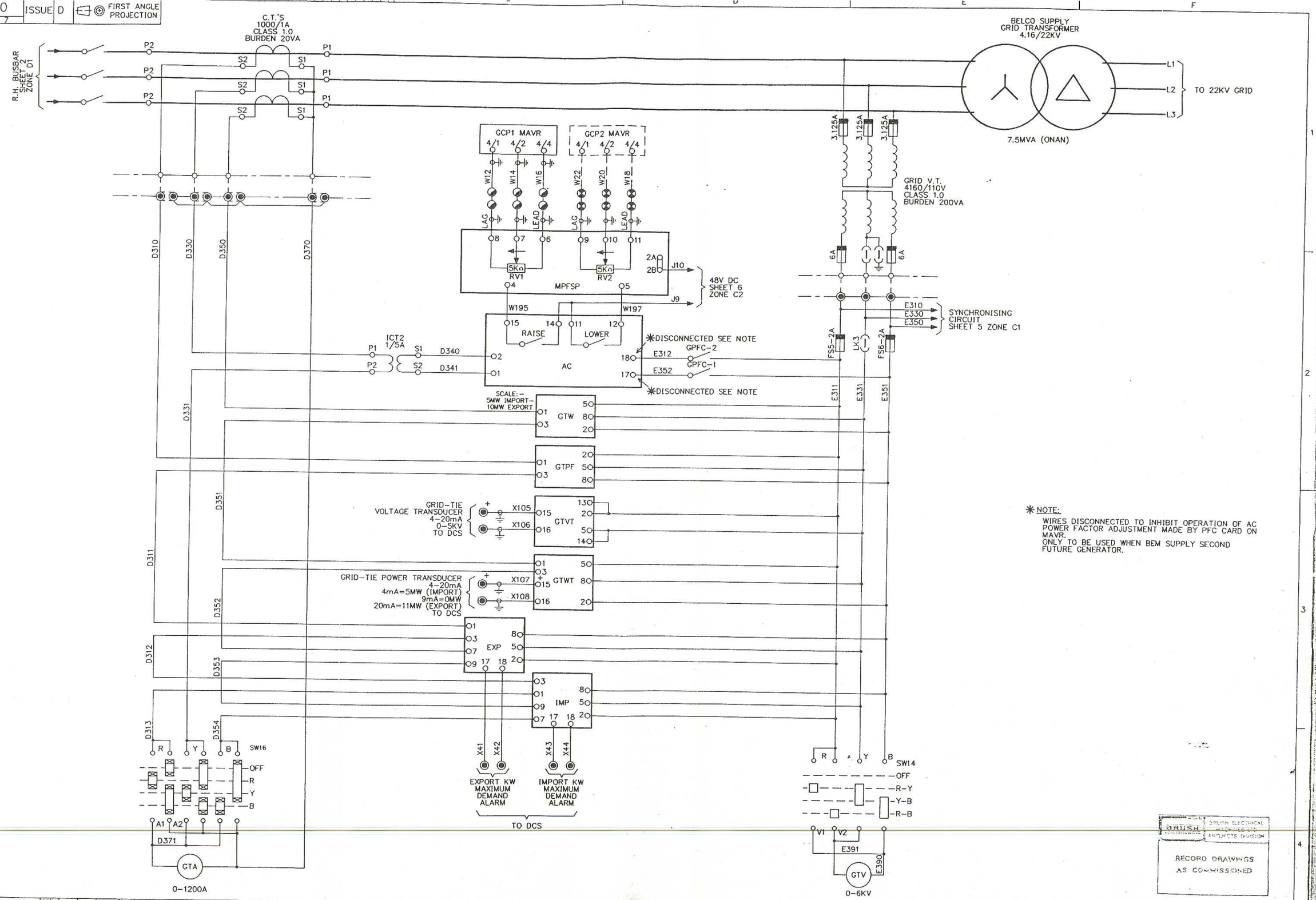

✱ NOTE:
WIRES DISCONNECTED TO INHIBIT OPERATION OF AC POWER FACTOR ADJUSTMENT MADE BY PFC CARD ON MAVR.
ONLY TO BE USED WHEN BEM SUPPLY SECOND FUTURE GENERATOR.

BRUSH | BRUSH ELECTRICAL MACHINES LTD PROJECTS DIVISION
RECORD DRAWINGS AS COMMISSIONED

ISS	DR'N	ZONE	ISS	DR'N	ZONE	ISS	DR'N	ZONE	ISS	DR'N	ZONE	ISS	DR'N	FRC	ZONE	CIRC. L
	CH'D	CARN		CH'D	CARN		CH'D	CARN		CH'D	CARN		CH'D	JAB	CARN	+ PRINTS TO
	APP	DATE		APP	DATE		APP	DATE		APP	DATE		APP	BLG	DATE 16/6/94	PROJ C&I DES
	DR'N	ZONE		DR'N	ZONE	D	NOTE REGARDING FUTURE CONNECTIONS TO AC ADDED.	DR'N DPL	ZONE	C	W22 WAS W18,W18 WAS W22 GTVT TERMLS 13,14 ADDED		DR'N GM	ZONE		PROJ. DES.
	CH'D	CARN		CH'D	CARN			CH'D JAB	CARN				CH'D JAB	CARN	09789	
	APP	DATE		APP	DATE			APP RC	DATE 17.11.93	B	TERMINAL No.'S ADDED ON 'IMP' & 'EXP'. TERMINALS ON GTW & GTPF REARRANGED.		APP BLG	DATE 17.5.93		

This drawing is confidential and the copyright of BRUSH ELECTRICAL MACHINES LIMITED © 1993 LOUGHBOROUGH, ENGLAND. It must not be copied or passed to a third party without written consent.

HAWKER | BRUSH ELECTRICAL MACHINES | CATERPILLAR

1st.CONTRACT No.	DRG.REF.	CAD.REF.	DR'N	DPL	DEPT	PROJECTS
09/65002		20850030	CH'D	JAB	SCALE	NTS
			APP	BLG	DATE	24/3/93

CIRCUIT DIAGRAM OF MIMIC PANEL

B 9620850 | ISSUE D

B9620850	ISSUE	D	FIRST ANGLE PROJECTION
SHEET 4 OF 7			

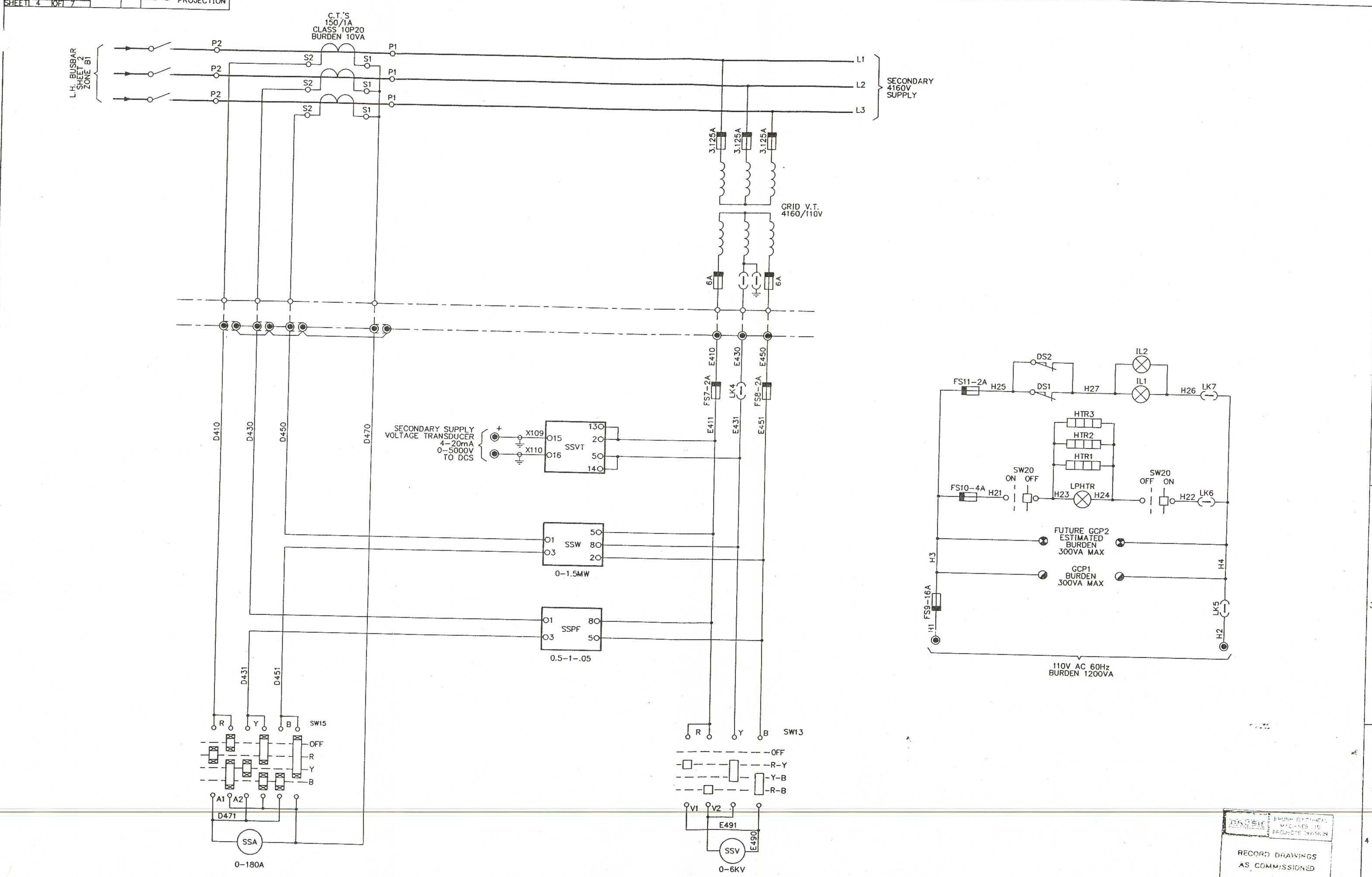

BRUSH ELECTRICAL MACHINES LTD PROJECTS DIVISION

RECORD DRAWINGS AS COMMISSIONED

ISS.		DR'N	CH'D	APP
D	SEE OTHER SHEETS	DPL		
C	SSVT TERMLS 13,14 ADDED	FRC	JAB	BLG (DATE 16/6/94)
B	SSPF TERMINAL 5 WAS CONNECTED TO E431 (Y). CONNECTIONS ...	GM	JAB	

CIRC. L + PRINTS TO PROJ C&I DES PROJ DES

This drawing is confidential and the copyright of BRUSH ELECTRICAL MACHINES LIMITED © 1993 LOUGHBOROUGH ENGLAND

HAWKER BRUSH

1st.CONTRACT No.	DRG.REF.	CAD.REF.	DR'N	DPL	DEPT	PROJECTS
09/65002		2085004D	CH'D	JAB	SCALE	NTS
CIRCUIT DIAGRAM OF			APP	BLG	DATE	24/3/93

B 9620850 | ISSUE D | FIRST ANGLE PROJECTION
SHEET 5 OF 7

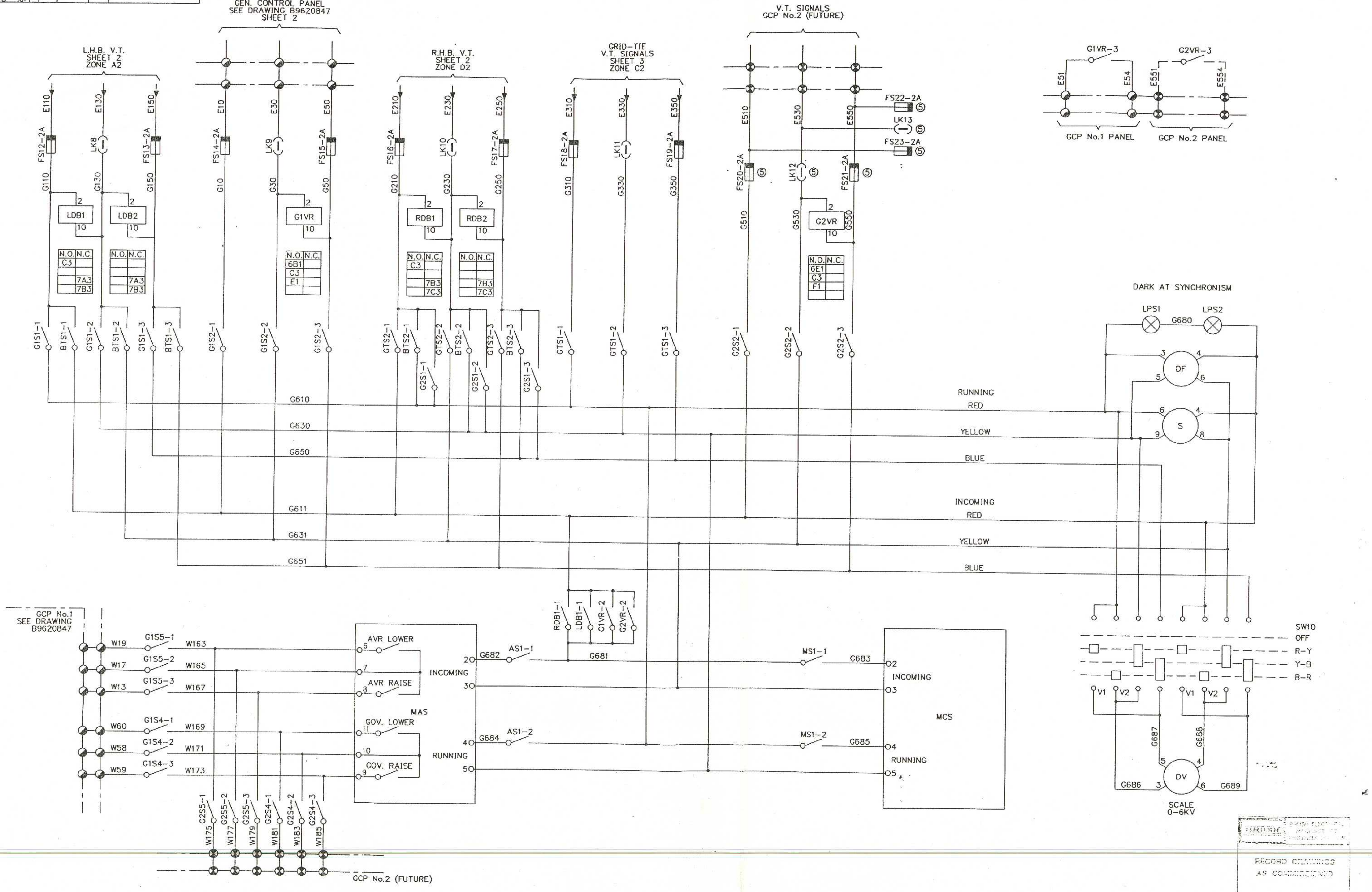

RECORD DRAWINGS AS COMMISSIONED

C	S-6 WAS 4,4 WAS 6 9 WAS 8,8 WAS 9	DR'N FRC / CH'D JAB / APP BLG	DATE 16/6/94
B	CONTACTS G2S1-1,G2S1-2 & G2S1-3 WERE CONNECTED IN PARALLEL WITH GTS1-1, GTS1-2 & GTS1-3 RESP'LY.	DR'N GM / CH'D JAB / APP BLG	CARN 09789 / DATE 17.5.93
D	SEE OTHER SHEETS	DR'N DPL / CH'D	DATE 19/9/94

CIRC. L
+ PRINTS TO
PROJ C&I DES
PROJ. DES.

This drawing is confidential and the copyright of BRUSH ELECTRICAL MACHINES LIMITED © 1993 LOUGHBOROUGH, ENGLAND. It must not be copied or passed to a third party without written consent.

BRUSH ELECTRICAL MACHINES — HAWKER SIDDELEY

1st.CONTRACT No. 09/65002 | DRG.REF. | CAD.REF. 2085005D

CIRCUIT DIAGRAM OF MIMIC PANEL

DR'N	DPL	DEPT	PROJECTS
CH'D	JAB	SCALE	NTS
APP	BLG	DATE	24/3/93

B 9620850 ISSUE D
SHEET 5 OF 7

B 9620850 | ISSUE D | FIRST ANGLE PROJECTION
SHEET 6 OF 7

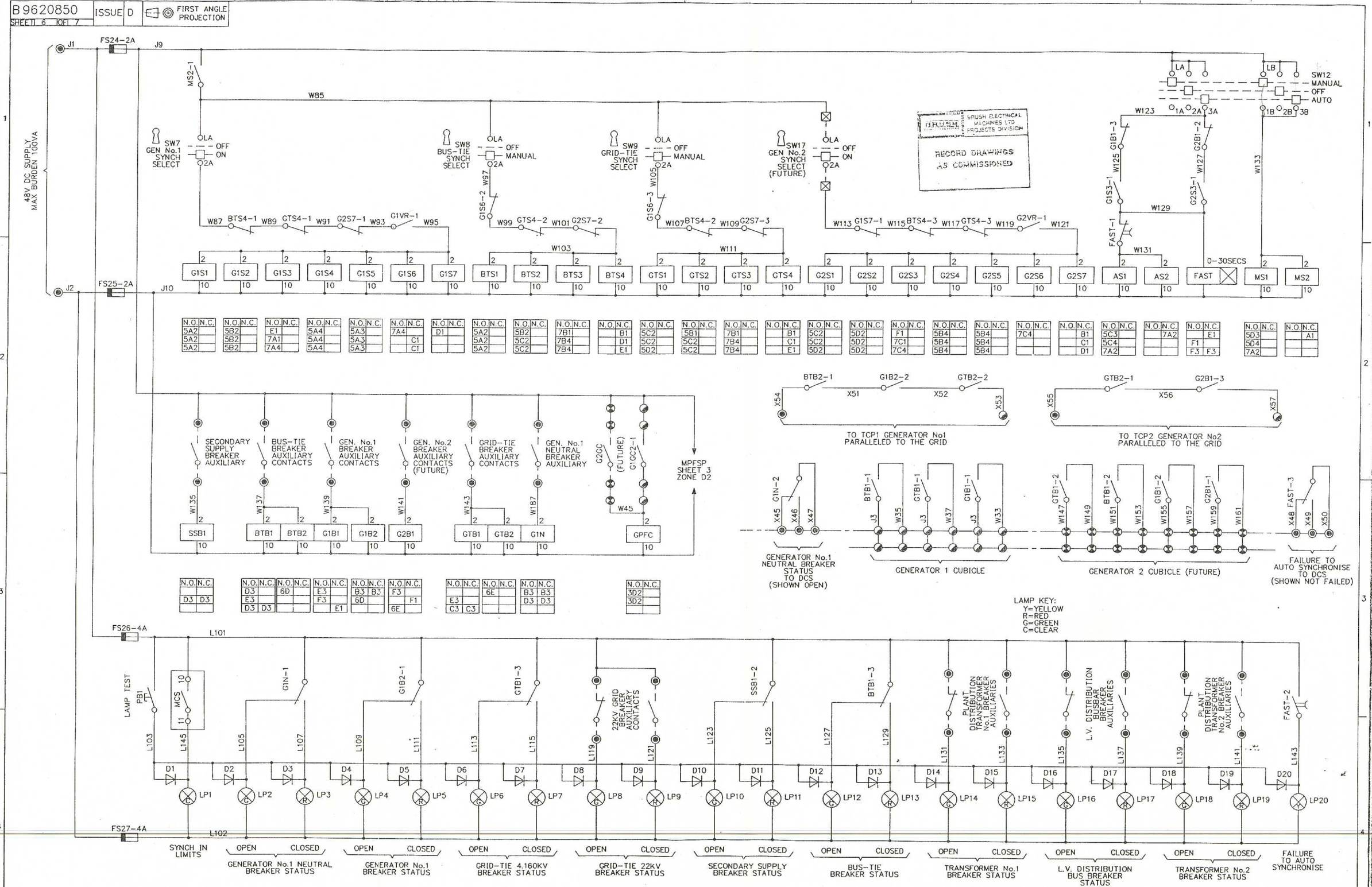

BRUSH ELECTRICAL MACHINES LTD PROJECTS DIVISION
RECORD DRAWINGS AS COMMISSIONED

ISS	DR'N	CH'D	APP	ZONE	CARN	DATE
A						
B						
C						
D	DPL	JAB	BLG			

C — BTB2,GTB2 ADDED GEN PARALLELED TO THE GRID SIGNALS ADDED
B — FAILURE TO AUTO SYNCH. CHANGEOVER CONTACT TO DCS ADDED.
D — WIRE NUMBER X53 WAS W33.

DR'N	FRC	ZONE	
CH'D	JAB	CARN	
APP	BLG	DATE	16/6/94
DR'N	GM	ZONE	
CH'D	JAB	CARN	06789
APP	BLG	DATE	17/5/93

CIRC. L
+ PRINTS TO PROJ C&I DES
PROJ. DES.

This drawing is confidential and the copyright of BRUSH ELECTRICAL MACHINES LIMITED © 1993 LOUGHBOROUGH, ENGLAND. It must not be copied or passed to a third party without written consent.

HAWKER SIDDELEY
BRUSH ELECTRICAL MACHINES

1st.CONTRACT No.	DRG.REF.	CAD.REF.	DR'N	DPL	DEPT	PROJECTS
09/65002		2085006D	CH'D	JAB	SCALE	NTS
			APP	BLG	DATE	24/3/93

CIRCUIT DIAGRAM OF MIMIC PANEL

B 9620850 ISSUE D
SHEET 6 OF 7

B 9620850 | ISSUE D | FIRST ANGLE PROJECTION
SHEET 7 OF 7

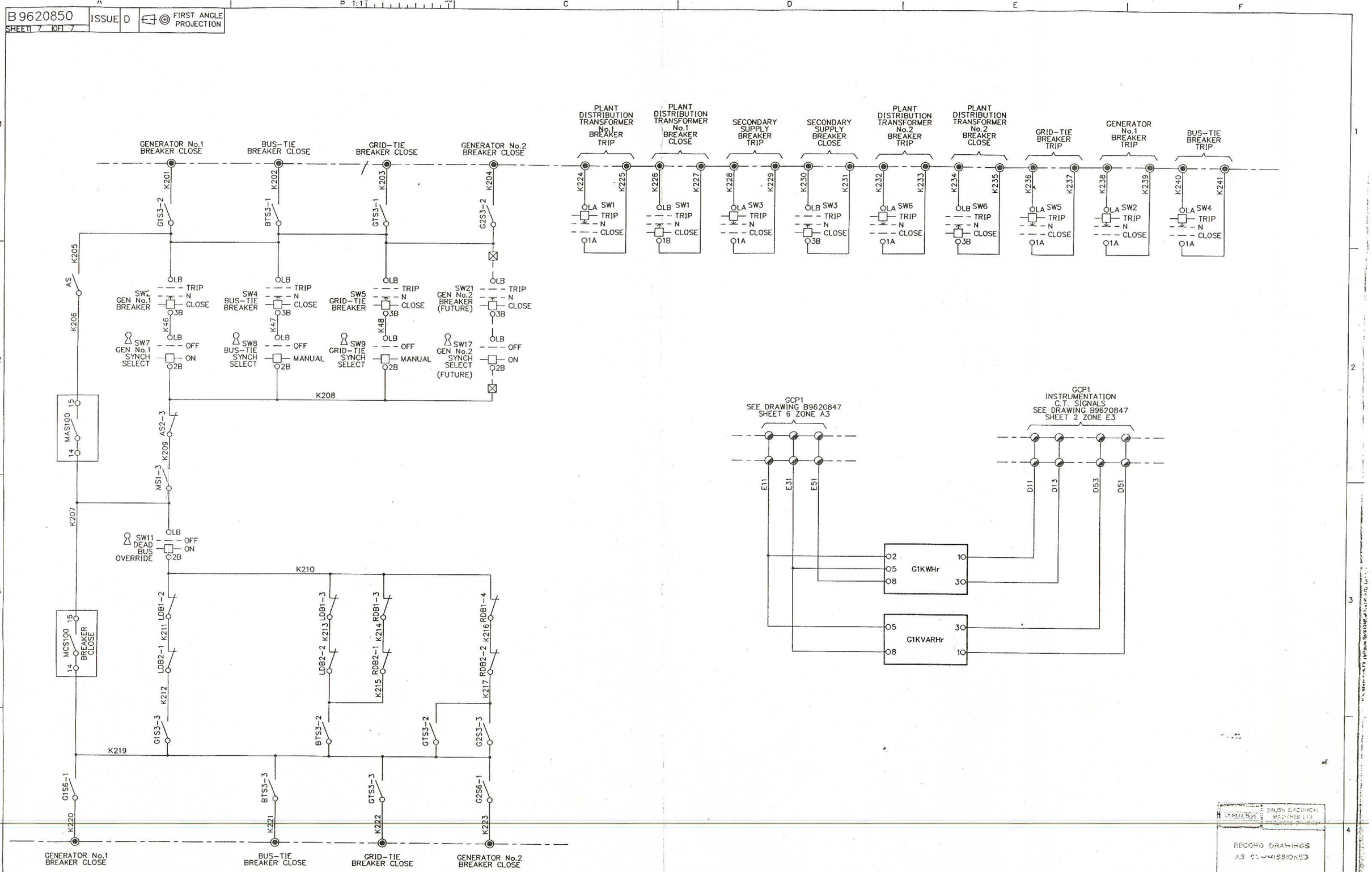

RECORD DRAWINGS AS COMMISSIONED

ISS	DR'N	ZONE	ISS	DR'N	ZONE	ISS	DR'N	ZONE	ISS	DR'N	ZONE	ISS	DR'N	ZONE
	CH'D	CARN		CH'D	CARN		CH'D	CARN		CH'D	CARN		CH'D	CARN
	APP	DATE		APP	DATE		APP	DATE		APP	DATE		APP	DATE
ISS	DR'N	ZONE	ISS	DR'N	ZONE	D	DR'N	DPL ZONE	C	SEE OTHER SHEETS	DR'N	FRC	ZONE
	CH'D	CARN		CH'D	CARN	SEE OTHER SHEETS	CH'D	KJJ CARN			CH'D	JAB	CARN
	APP	DATE		APP	DATE		APP	B.C. DATE 17/7/94			APP	BLG	DATE 16/6/94
									B	SW21 REF. ADDED TO GEN.2 BREAKER SWITCH. SW11 SHOWN LOCKABLE.	DR'N	GM	ZONE
											CH'D	JAB	CARN 09789
											APP	BLG	DATE 17.5.93

CIRC. L
+ PRINTS TO
PROJ C&I DES
PROJ. DES.

This drawing is confidential and the copyright of BRUSH ELECTRICAL MACHINES LIMITED © 1993 LOUGHBOROUGH, ENGLAND. It must not be copied or passed to a third party without written consent.

HAWKER SIDDELEY
BRUSH ELECTRICAL MACHINES

1st.CONTRACT No.	DRG.REF.	CAD.REF.	DR'N	DPL	DEPT	PROJECTS
09/65002		2085007D	CH'D	JAB	SCALE	NTS
			APP	BLG	DATE	24/3/93

CIRCUIT DIAGRAM OF MIMIC PANEL

B 9620850 | ISSUE D

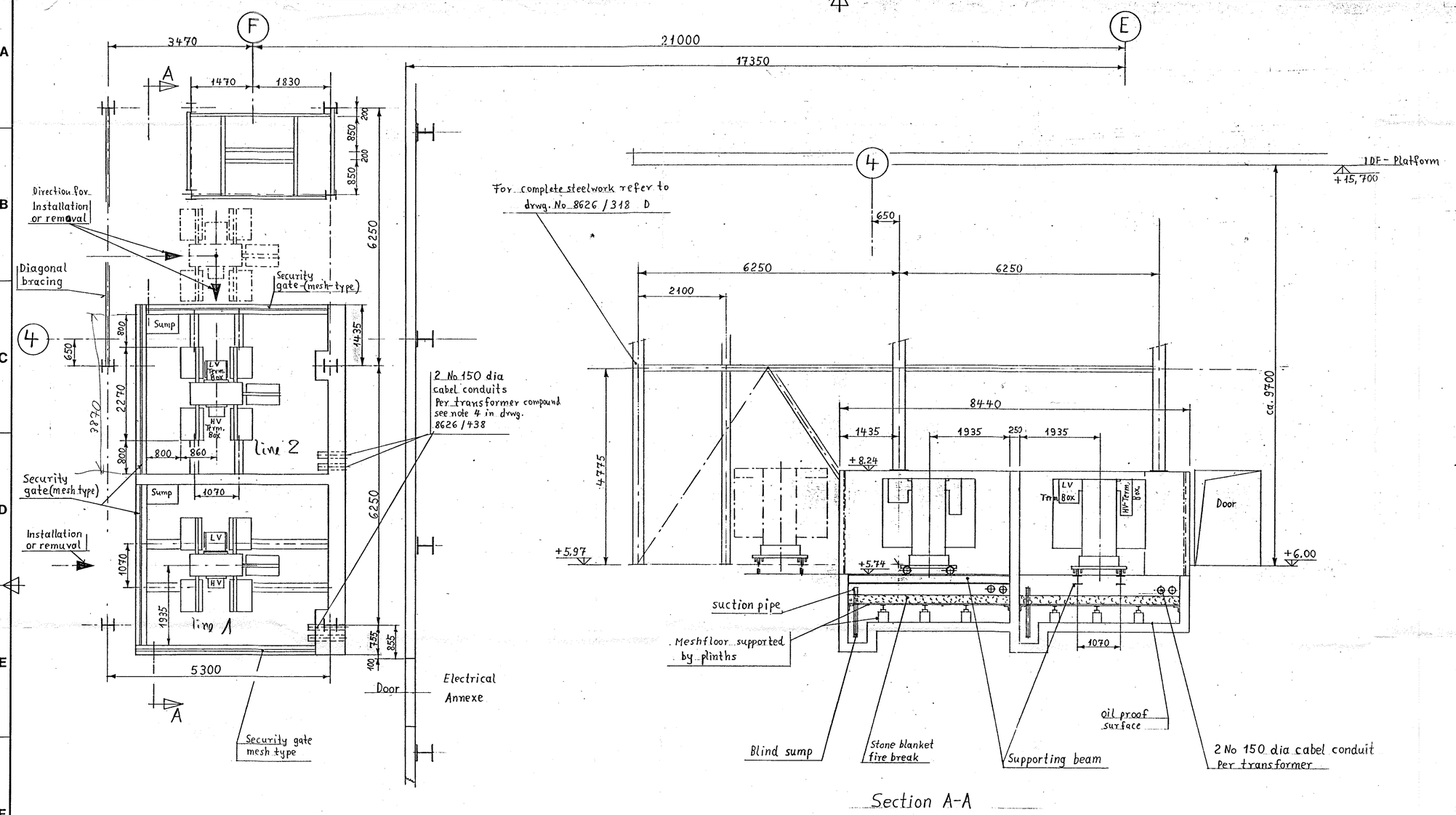

Section A-A

Note: For transformer main dimensions refer to Brush Tender outline drwg No E 6486 136

RECEIVED 27 MAR 1995

GOVERNMENT OF BERMUDA
TYNES BAY WASTE TREATMENT FACILITY

Tolerances unless otherwise specified

Scale 1:50 | Tot. weight

Parts List

Date	By	Alterations	Rev
11.11.92	Lo	div.	A

	Date	By
Drawn	9.11.92	
Chkd	15.2.93	
Apprd	15.2.93	

Transformer compounds G.A.

ENVIRONMENTAL ENG. DIV.

Ref drwg.:

5675 | 300. 1. 1868 | A

Rep. for: | Rep. by:

A. Messerli AG 8152 Glattbrugg Zanders T 2000 RO

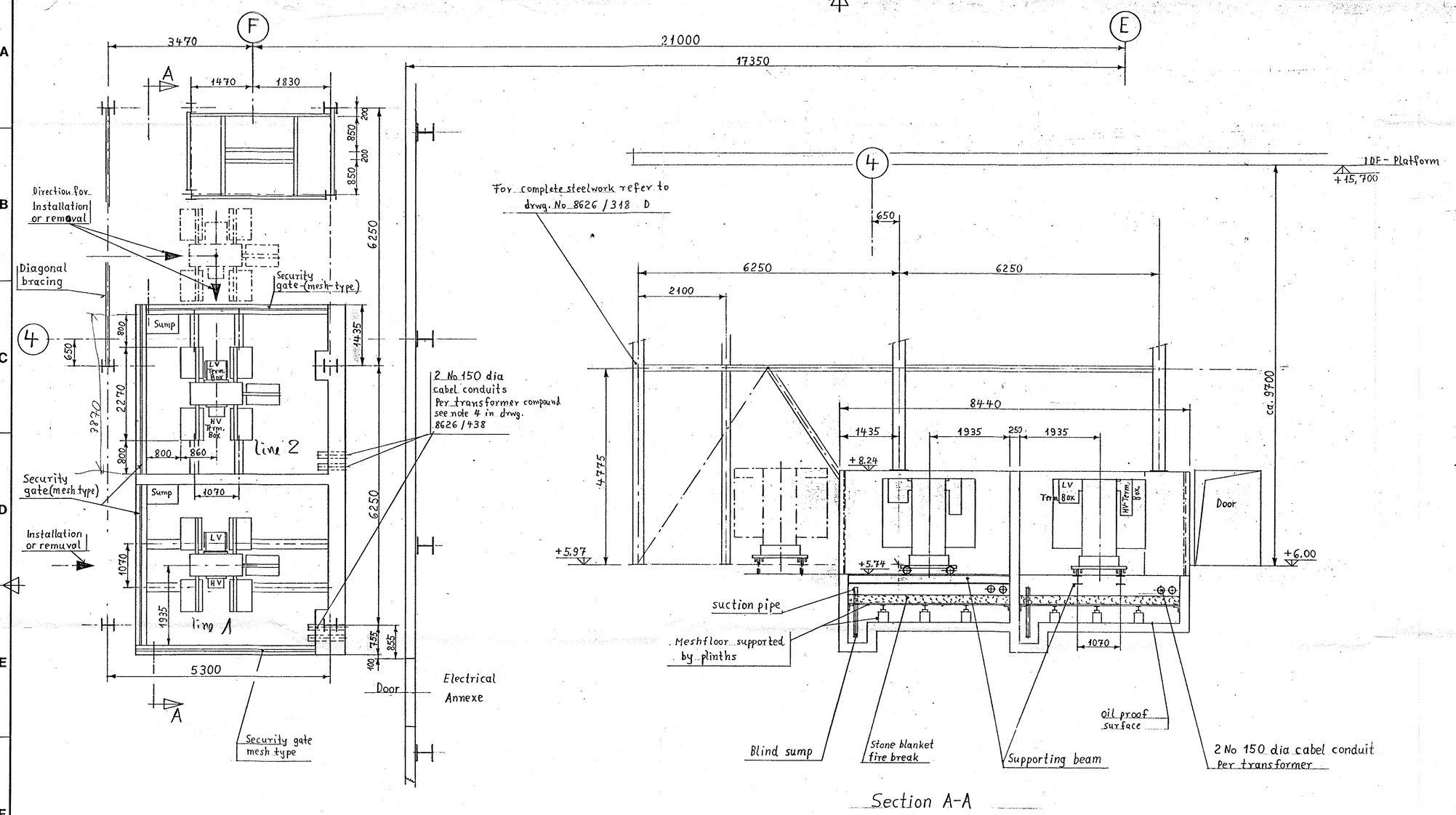

Section A-A

Note: For transformer main dimensions refer to Brush Tender outline drwg No E 6486 136

RECEIVED 27 MAR 1995

GOVERNMENT OF BERMUDA
TYNES BAY WASTE TREATMENT FACILITY

Tolerances unless otherwise specified

Scale 1:50 | Tot. weight

Parts List

Date	By	Alterations	Rev
11.11.92	Lo	div.	A

	Date	By
Drawn	9.11.92	
Chkd	15.2.93	
Apprd	15.2.93	

Transformer compounds G.A.

ENVIRONMENTAL ENG. DIV.

Ref drwg.:

5675 | 300. 1. 1868 | A

Rep. for: | Rep. by:

A. Messerli AG 8152 Glattbrugg Zanders T 2000 RO