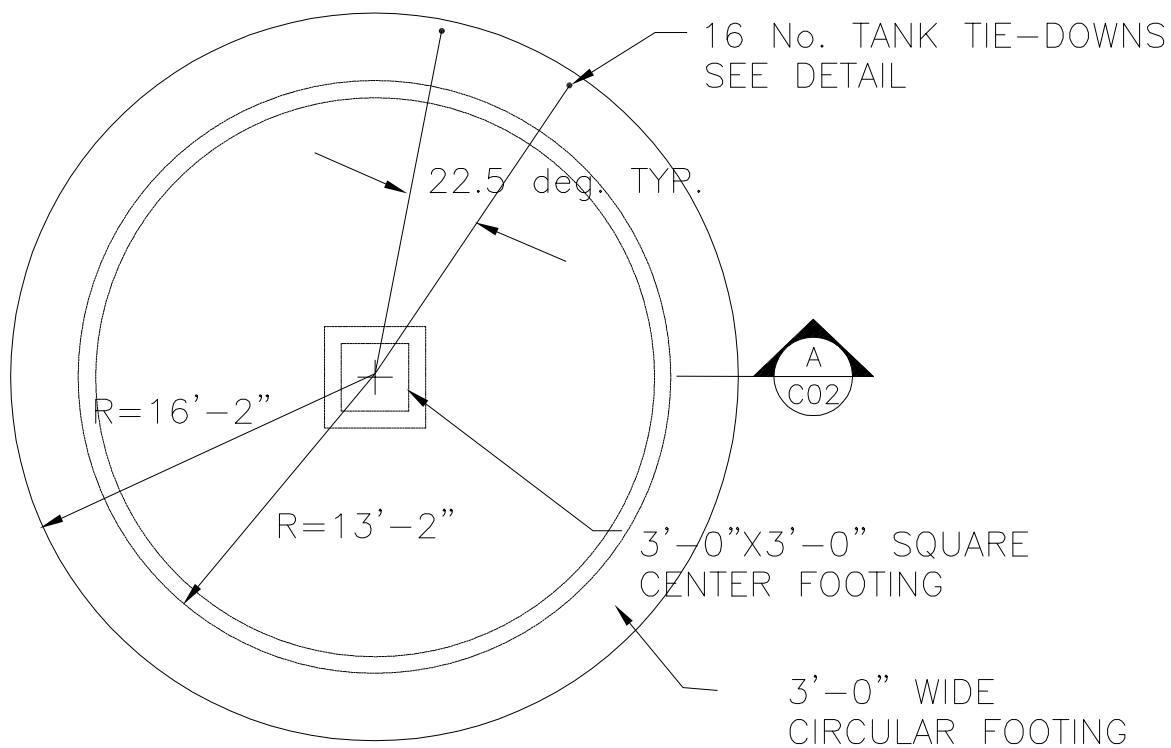

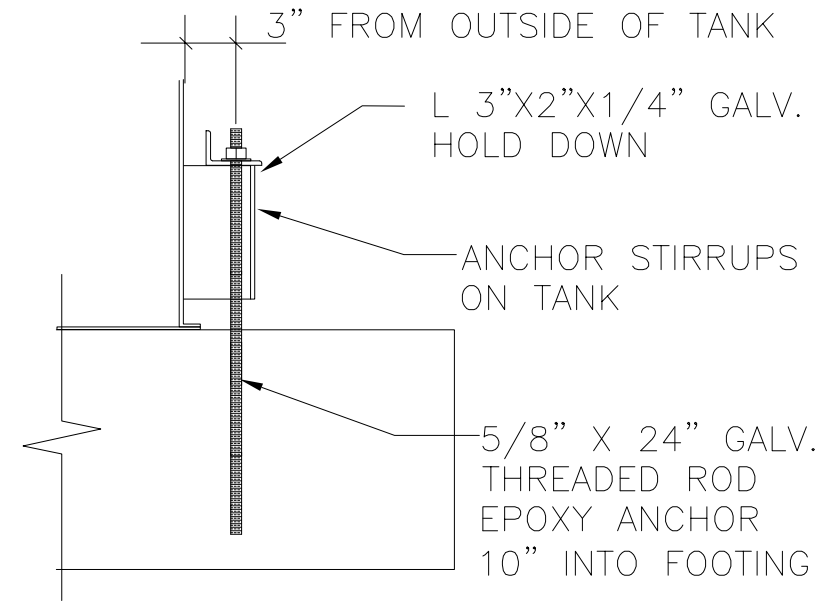

NOTES

CONCRETE – 20 MPa
REBAR – 400 MPa
– GALV.
3" COVER UNO

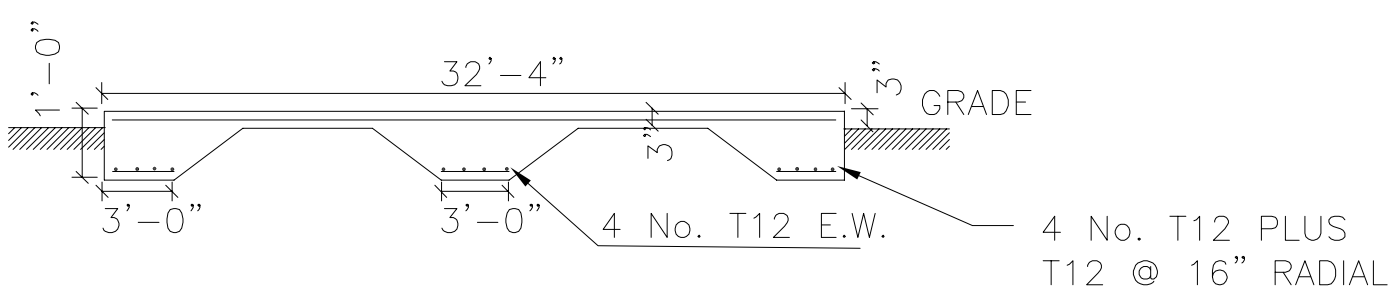

THE MINISTRY OF
PUBLIC WORKS

P.O. Box HM525 Hamilton HMCX Bermuda
Phone: (441)295-5151

DEPARTMENT OF WORKS
AND ENGINEERING
Fax: (441)292-4219

Water and Wastewater Section

ISSUED FOR: Request for Proposal

AMENDMENTS:

NO	REVISION	BY	APP	DATE
1	.	.	.	.

SCALE: .

SURVEY
PREPARED BY: . DATE: .

DESIGN
PREPARED BY: . DATE: .
CHECKED BY: . DATE: .

DRAWING
PREPARED BY: . DATE: .
CHECKED BY: . DATE: .

APPROVED BY: . DATE: .

PROJECT NUMBER: .

PROJECT NAME:

North Shore
Water Truckers Outlet
Water Tank Base

As-built Record
North Shore Road
Devonshire DV05

SHEET TITLE:

Existing Tank Base
Details

SHEET NUMBER: C02

REVISION 1

ACAD 2002